OptoSupply
Knowledge Is Life

# 3PCS Xeon 1 Power Warm White LED Module

## OSPR3XW1-M5XME1C1E

## ■ Features

- High Power Output
- Big Emitting Angle
- Long Life
- Quick Response
- Superior ESD Protection
- Superior UV Resistance

## ■ Applications

- Small Space Lighting
- Auto Lighting
- Light Source for Optical Fiber

## ■Outline Size

Unit: mm
Tolerance:±0.30mm

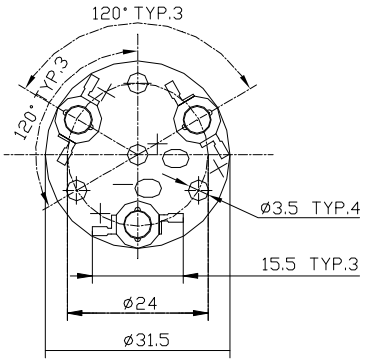


## ■ Absolute Maximum Rating (Ta=25℃)

| Item | Symbol | Value | Unit |
|---|---|---|---|
| Operating Temperature | Tope | -30 ~ +85 | ℃ |
| Storage Temperature | Tstg | -40~ +100 | ℃ |
| Input Voltage(DC) | $V_i$ | 12 | V |
| Input Current(DC) | Ii | 400 | mA |
| Power Dissipation | Pa | 4.8 | W |
| Color Rendering Index | Ra | 70~80 | |

## ■Picture

## ■ Electrical -Optical Characteristics (Ta=25℃)

| Item | Symbol | Condition | Min. | Typ. | Unit |
|---|---|---|---|---|---|
| Input Voltage(DC) | $V_i$ | - | 9 | 10 | V |
| Input Current(DC) | Ii | - | 150 | 350 | mA |
| Power Dissipation | Pa | - | 1.35 | 3.5 | W |
| Color Temperature | CCT | $I_F$=350mA | - | 3000 | K |
| Whole Luminous Flux* | Φv | $I_F$=350mA | - | 270 | lm |
| Beam Pattern | BP | - | - | 120 | Deg |
| Net Weight | Wei | - | - | 5 | g |

*Tolerance of luminous intensity is ±15

## ■Circuit

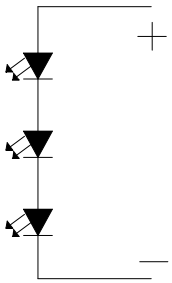


**AUTO LED Application Technologies**